ANIMAL RESEARCH INSTITUTE FACILITIES FOR DAIRY CATTLE BREEDING RESEARCH*

by

J. E. Turnbull
Member C.S.A.E.
Engineering Research Service
Canada Department of Agriculture, Ottawa

C. G. Hickman
Animal Research Institute
Canada Department of Agriculture, Ottawa

A. J. Lee
Animal Research Institute
Canada Department of Agriculture, Ottawa

INTRODUCTION

This describes the structures, equipment and feed handling features of a unit of research buildings constructed as part of the Animal Research Institute Greenbelt Development, on the outskirts of Ottawa. This unit consists of five cattle buildings and a feed center designed for the dairy cattle breeding program of the Animal Research Institute.

Planning of these facilities was an outgrowth of genetics research conducted over the past 15 years and is based on well established experimental designs. These designs specify animal numbers, and the distribution of animals by age and lactation parity. Animal Research Institute investigations into housing and management practice were conducted over a 10-year period, followed by final studies by the Engineering Research Service. American and European features were combined in the final plans.

Animal Research Institute scientists set the general conditions for animal environment and management for the various cattle age-groups. From this, the Director of the Animal Research Institute chaired a preliminary design committee consisting of research scientists, an agricultural engineer from Engineering Research Service, the Greenbelt planning officer from the Architectural and Engineering Section, and farm operations staff.

This design committee prepared for each building a written brief for the guidance of the Department of Public Works and the Consultants, together with a tentative floor plan and sections. Preliminary drawings were prepared with about the same degree of detail as in the figures of this paper.

The briefs and drawings were then transmitted through the Department of Agriculture to the Department of Public Works, and then to a private consulting group for preparation of complete contract documents.

Department of Agriculture staff continued to supply design information and animal equipment details, as each building proceeded through the various design stages to a set of drawings and specifications suitable for contract. At this writing, three of the five animal buildings are complete and occupied, and the remaining two are to be constructed in 1968.

GUIDELINES USED FOR DESIGNING BUILDINGS

This set of dairy buildings was planned according to guidelines established by agreement between Agriculture and Public Works Departments.

Design to 'Farm Building Standards' (1)

This Supplement, together with appropriate sections of the National Building Code 1965, provided useful guidelines for structural safety, fire protection, animal space requirements, ventilation and heating requirements, electrical services, etc. It was found that many other accepted engineering standards developed for residential, industrial and commercial buildings had little application to buildings for animal research.

For economy, and to reasonably duplicate contemporary methods of farm building construction in Canada, the structures are single-storey, insulated wood frame, clear-span construction, with exhaust fan ventilation. Walls and ceilings are epoxy-painted plywood interior, and factory-painted sheet metal exterior. Wall frames are stud wall or post frame, depending on the requirements.

Total Confinement Housing

Total confinement of dairy cattle throughout the year in insulated buildings is unusual in Canada, but this is a requirement for precise research. Total confinement can provide extensive environmental control including lighting and provides uniform controlled feed supply regardless of season. It also simplifies collection of blood samples, live weights, body measurements and other data.

Separate Building Units

Separate building units were planned to house groups of cattle at various ages or production stages. This practice is desirable for large herds and has simplified planning of each building unit. It also provides fire separation, fresh air supply, disease control, and corresponds with the developing specialization of rearing replacement heifers for sale to commercial milk producers.

Ventilation

Exhaust fan groups located in one or both walls of each animal area are controlled by grouped thermostats near the room centre. Thermostats are adjusted in temperature steps to provide three to four ventilation rates, from winter minimum to summer maximum.

Light-proof adjustable fresh air inlets distribute unmodified outside air at the long walls near the ceilings in rooms up to 44 feet wide, and at the ceiling centre line in rooms 50 to 68 feet wide.

Heat lamps and/or fan-forced suspended heaters provide supplemental electric heat in young stock areas where winter heat balance is likely to be more critical. Adult animal areas depend on animal heat alone.

Manure Systems

Manure systems as far as possible are based on hydraulic removal, using animal area floors of expanded steel mesh (calves) and reinforced

*Contribution No. 151 from Engineering Research Service, and No. 313 from Animal Research Institute, Research Branch, Canada Department of Agriculture, Ottawa, Ontario.

concrete slats (young stock and cows). This method minimizes bedding costs since only the tie stalls and free stalls require any bedding. Thus almost half of the herd requires no bedding, and an additional quarter of the herd in free stalls requires only very small amounts. Liquid manure storage capacity was based on six months accumulation to eliminate the need for winter spreading.

Minimizing labor was another important aspect in the choice of hydraulic manure removal; manure removal is done by a specialized crew, and the herdsmen in each building are freed for other animal management duties and for research operations.

The manure removal system, in all animal buildings except the bull barn and tie-stall milking barn, is the "sluice-gate plus recirculation system for long channels" as described previously (4).

DESIGN OF THE DAIRY BREEDING RESEARCH UNIT

Table I indicates the number and capacities of individual buildings in the unit; figure 1 indicates the arrangement of buildings on site, and typical transfers of animals from building to building.

Feed Storage and Distribution

Original plans for the unit included hay and silage storage attached to each animal building. This would have required that each building have its own storage unloading and feed mixing facilities. Further disadvantages of this arrangement included smaller, less economic storage units, and problems of maintaining feed supply for 12 months per year feeding (e.g. a minimum of two silos for each type of silage). Also the subsoil at some of the building sites was found to be doubtful foundation material.

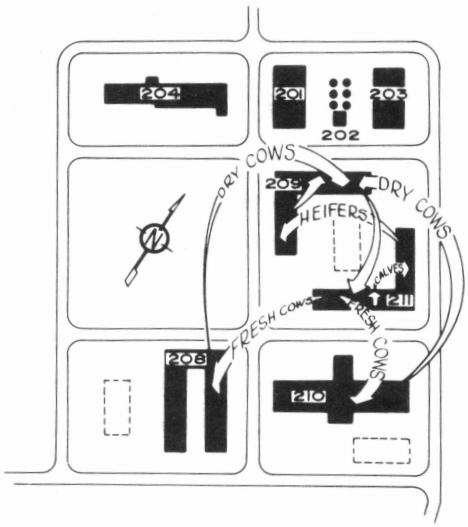

Figure 1. Site plan of Dairy Breeding Research Unit, Animal Research Institute Greenbelt Development.

A much more workable and efficient arrangement was devised, based on a centralized feed facility for long-term roughage storage (chopped hay barns and silos) and short-term concentrate storage (bulk bins). See Table I, buildings 201, 202, 203. Total roughage storage capacity is 2,500 tons dry matter as silage (grass or corn) plus 850 tons dry matter as chopped hay, based on silage at 1½ lb D.M. per day per 100 lb animal body weight, plus hay at ½ lb D.M.

With the centralized feed storage and multiple silos, only two silos are 'open' at any one time. This guarantees maximum usage rate, to minimize spoilage. Each silo can be emptied completely before refilling, and there are no problems of redistributing feed between barns when storage supplies run out at the end of the feeding seasons.

Components of the complete ration are assembled for each main feed group by a truck-mounted three-screw horizontal mixer (figure 2). The 280 cubic foot mixer box is mounted to the truck frame by four load transducers electronically linked to a scale indicator in the truck cab. This permits the truck driver to stop the mixer-truck under feed-receiving points (silo chutes, chopped hay elevators, and bulk bin augers) to assemble and weigh the main feed components.

Mixing is accomplished in transit from storage to the livestock barn, and the mixed ration is re-weighed out to each animal group. Mixed feed is delivered into an outside hopper feeding a double-chain conveyor leading into each animal area (figure 3). This provides a homogeneous feed, facilitating individual feed consumption studies.

TABLE I. DAIRY BREEDING RESEARCH UNIT - A. R. I. GREENBELT DEVELOPMENT

A.R.I. Building Number	Type of Housing	Housing Capacity	Animal Stage
201 and 203	Hay Storages	2, 72' x 136' x 20' chopped hay	
202	Silos	6, 30' diam. x 80' silos 6, 12-ton bulk bins	
211	Maternity Pens	24 cows	Cows and heifer calves, 2 weeks before calving to 3 days after
	Calf Stalls	128 calves	Birth to 12-16 weeks old
	Heifer Stalls (or pens)	144 heifers (tied) or 175 heifers (loose) at 15 ft^2/heifer	12-16 weeks old to 8-10 months old (or bulls 4 to 8 months old, for individual feeding)
209	Growing Pens	240 heifers at 22.7 ft^2/each	8-10 months old, to 2 months before calving
	Free Stalls	120 dry cows and pregnant heifers	2 months to 2 weeks before calving
210	Tie-Stalls	240 milk cows	First-and-second lactations, 3 days after calving until dry
208	Free Stalls	240 milk cows	Third-and-later lactations, 3 days after calving until dry
204	Loose Housing	30 bulls at 83 ft^2/each	Young bulls 8-12 months old
	Tie-Stalls	36 bulls	Bulls in waiting
	Pens	6 bulls	Active bulls Sick, injured or difficult bulls.

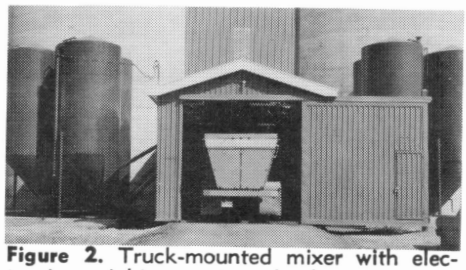

Figure 2. Truck-mounted mixer with electronic weighing system loads components of the ration.

Figure 3. Mixer-truck delivers mixed ration to cattle barn.

Where cattle require individual feeding, the feed conveyors discharge into feed rooms for re-handling. All group-fed cattle, however, are fed directly from the mixer truck by matched conveyors and feed spreaders.

These feed conveyors and feed spreaders are all of one manufacture for easier maintenance. The feeder is

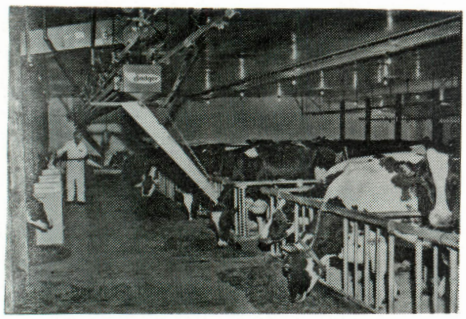

Figure 4. Self-propelled mechanical feeder spreads ration in cow feed passage. Feed spout can be swung to either side of passage.

a double-chain-and-flight conveyor in which the entire conveyor unit reciprocates a distance of one-half the length of the manger. This system is adaptable to feeding either side of a feed passage (as in figure 4), or to a double-sided feed bunk dividing 2 parallel pens. The conveyor reciprocates for several cycles during each feeding, discharging feed uniformly along the bunk. There is no problem of reseparation of feed components of different densities as with some types of mechanical feeder.

The 24 maternity pens in the south wing of Barn 211 are 10 x 12 feet with concrete floors, and with a gutter cleaner leading to an uninsulated solid manure loading area and bedding storage at the west end.

Calves are weaned after two days and raised for 12-16 weeks in 2¼ x 5 foot stalls (figure 6) adjacent to the maternity pens. These single-calf stalls are framed with 2-in. dip-treated wood and are set in place over liquid manure trenches 5 feet wide by 4 feet deep. The stalls are designed to be easily dismantled for cleaning.

Pen floors were made with 12-gauge expanded steel, 1 x 2¼ inch mesh, flattened. Experimental stalls tested prior to construction of Barn 211 showed that the expanded metal floors were much cleaner than wood-slat floors. High-density-overlaid fir plywood, although expensive, ($.55 per square foot) proved to be the only satisfactory pen wall material tested; calves on experimental diets chewed rapidly into bare plywood and painted plywood.

The 12-gauge expanded metal floor panels are showing some breakage at the mesh-to-frame welds; 10-gauge, 1 x 2½ inch mesh is therefore recommended, although the cost of the heavier mesh is considerably higher ($37.25, compared to $23.40 per 100 sq. ft.) An unresolved design problem is the 2¼ x 5 foot pen size in relation to 4 x 8 foot standard expanded metal panels. The width is satisfactory since one-half of the 4-foot width can just cover the 1½-inch steel angle side-frames; the length however involves a waste of three feet. Pens 2¼ x 4¼ foot would be more economical, and would be adequate when calves are group housed at 8 weeks instead of 12 to 16 weeks.

Dimensions of the pen doors, including neck openings, hoops for plastic feeding pails, and water bowls, have been worked out through trial and error, and were based originally on Forsyth (2). Newborn calves in stalls adjacent to the maternity pens will occasionally escape through the seven inch neck opening. Adding a removable insert at one edge of the hole for a few days has solved the problem.

Young calves have not readily learned to operate the nose-operated water bowl valves; adding a horizontal extension to the nose lever has solved the problem. A small notch in the edge of each pen door allows the door to swing out past the bowls.

Odors in the calf area to date have been decidedly reduced when the trenches have been adequately primed with water.

Heifer Stall and Pen Area, Barn 211, East Wing (Figure 5)

Calves graduate from liquid to solid diets at about six weeks; at 12 to 16 weeks old the suckling problem is virtually over and they can be moved to group pens in the east wing of Barn 211. This area has stalls 2¾ and 3½ feet wide. Manure trenches under the stalls are similar to the calf area, but the floors are slotted concrete.

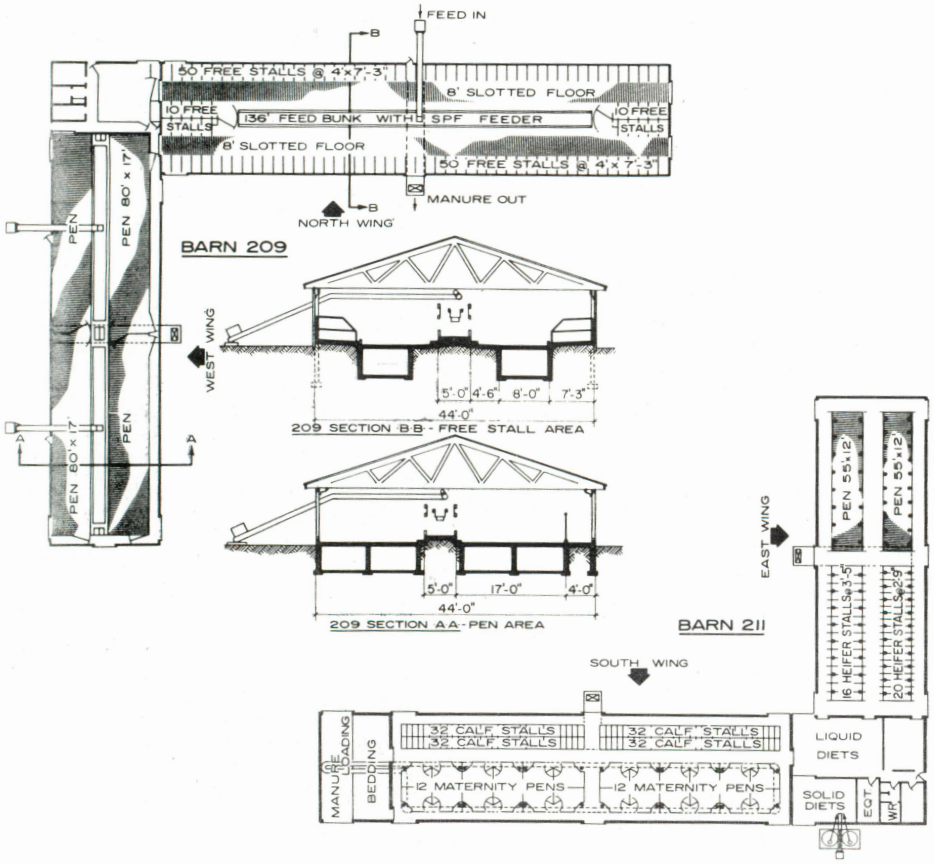

Figure 5. Floor plans and sections, Barns 211 and 209.

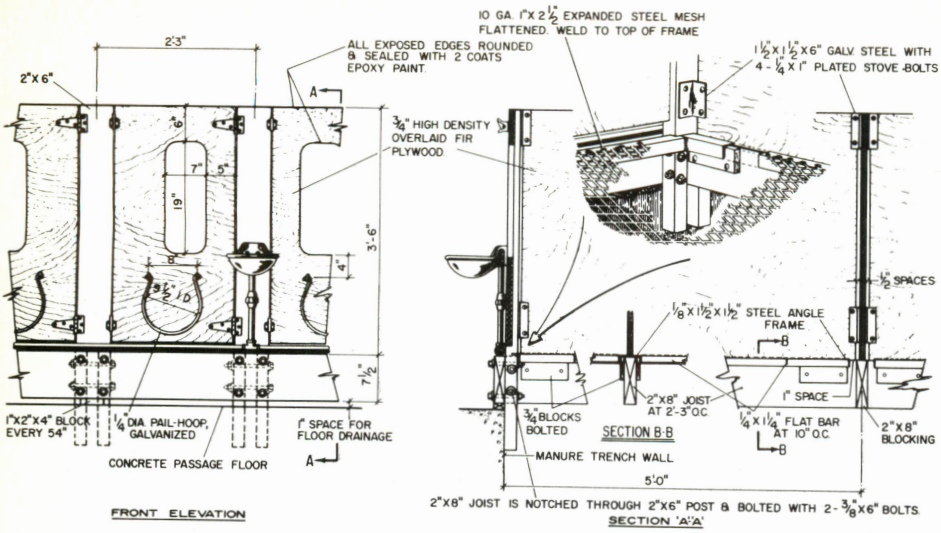

Figure 6a. Details of calf stalls with expanded steel mesh floor panels.

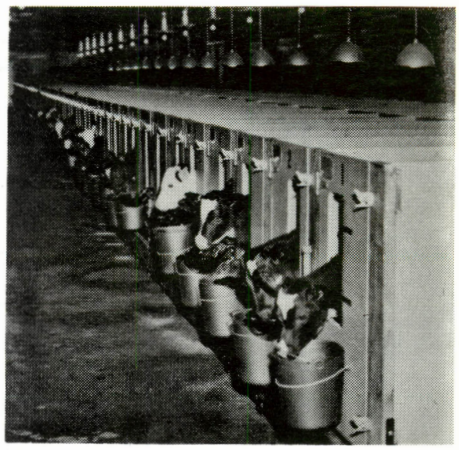

Figure 6b. Calf stalls with diet pails and water bowls.

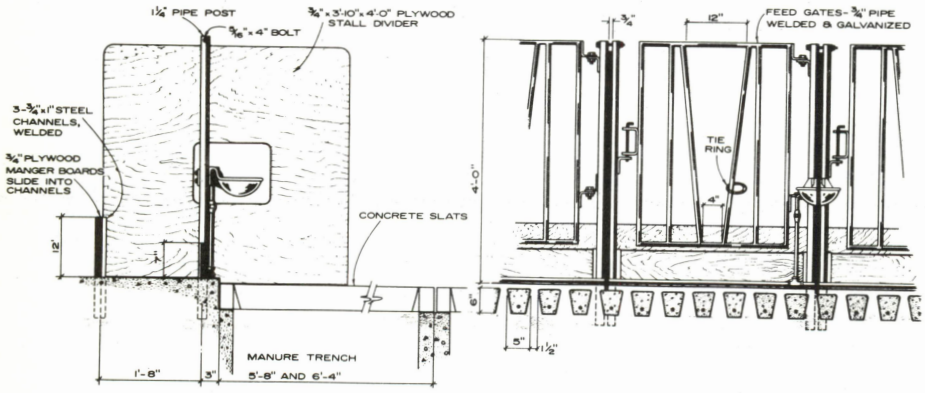

Figure 7a. Details of heifer stalls convertible to group feeding pens, Barn 211. Section and elevation of stall fronts.

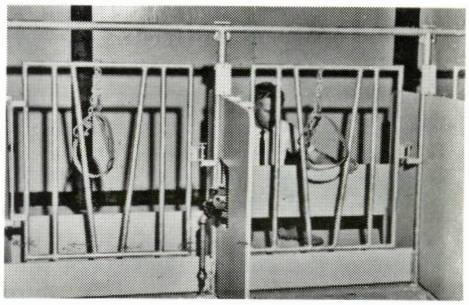

Figure 7b. Stall details seen from inside pen

These stalls (figure 7) were designed for individual controlled feed intake, with heifers tied. A few young bulls from 5½ to 8 months old also use the controlled feeding stalls. Tie-stalls are divided by plywood panels to prevent poaching. Alternatively, dividers can be removed to make slotted-floor group feeding pens. All manger-fronts and dividers slip into steel channels for ease of alteration. Water bowls must be uncoupled at the pipe union for removal of even-numbered stall dividers.

Short-term observations to date indicate that heifers are much cleaner loose than tied; manure from the tied heifers accumulates on the slats at the rear of the stalls.

Heifer Growing and Breeding Area, Barn 209, West Wing (See Figure 5)

These group pens are cheaper than stalls for growing heifers during a period when individual feed intakes are not recorded. Only body weight measurements are taken, so the operation lends itself to fully-mechanized feeding. The area has four large pens; one for a young group receiving grain, one for an older group on roughage only, one for heifers to be bred and the fourth for bred heifers. Two separate mechanical feeders are required in order to provide four separate ration allotments.

Pen floors of slotted concrete are virtually self-cleaning at the animal density indicated in Table I, and animals are acceptably clean. Concrete slat and slot dimensions are 5 inches and 1½ inches respectively as in other buildings.

Dry Cow Free Stall Area, Barn 209, North Wing

This area (see figure 5) houses dry cows and pregnant heifers. Free stalls were provided for this group to train heifers for free stall housing when moved later to milking Barn 208. The 2-row/4-row stall arrangement makes maximum use of space, providing one 4-foot stall, 27 inches of feeder space, and 73.4 square feet total area per cow. Feeding is mechanized as in 209, west wing, but adapted to feeding two groups only.

The free stall design (see figure 8) is a compromise incorporating the best features of typical free stalls in

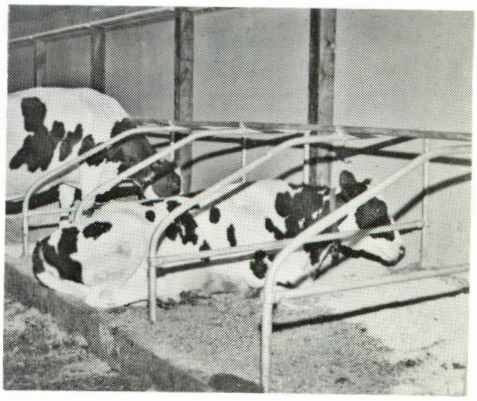

Figure 8. Free stalls in Barn 209.

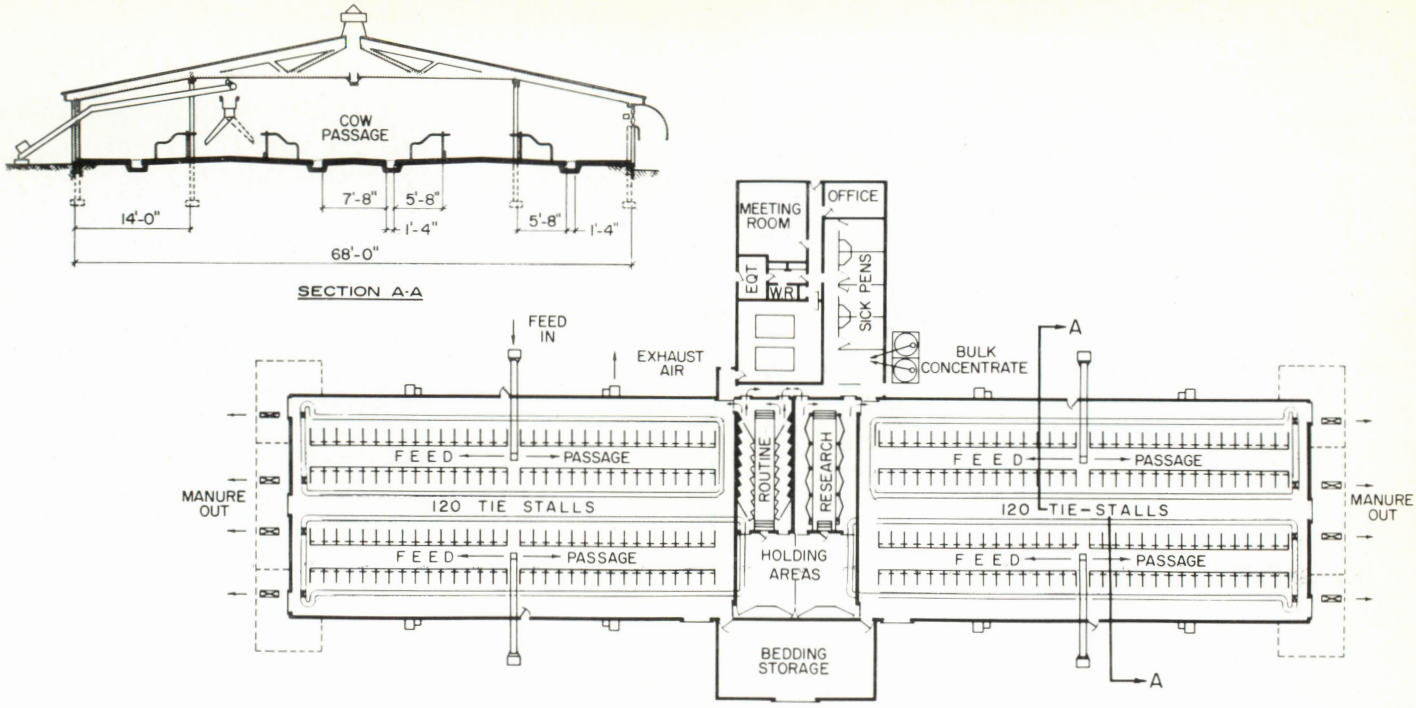

Figure 9. Floor plan and section of Barn 210, tie-stall milking barn.

Canada, U.S.A. and Scotland (3). Free stalls are 7¼ feet long including the 3 x 10 inch wood heel curb. Stall platforms are six inches above the slatted passage, and rise three inches more to the head. An adjustable headrail has been added to reduce soiling of the stalls; now except for a few untrained cows recently introduced from other barns, these cows are the cleanest in the unit.

Tie-Stall Milking Barn 210 (Figure 9)

This barn, occupied in 1967, provides 240 tie-stalls for first-and-second lactation cows, in two wings. Cows are released from stalls in groups of 15 and herded into a milking area between the two stall areas. Milking facilities include one double-8 herringbone milking parlor with weigh-jars, and one parlor with two parallel systems of 4-in-line side-entering stalls.

The herringbone parlor is intended for routine milking procedures with minimum labor. The parlor with eight side-entering stalls is designed for research milking operations; here comparisons can be made with vacuum levels, pulsation rates and ratios, etc. An oversized operator area is provided for specialized milking equipment such as quarter-milkers, vacuum recorders, and other instruments.

One key to the smooth operation of a tie-stall barn with parlor milking

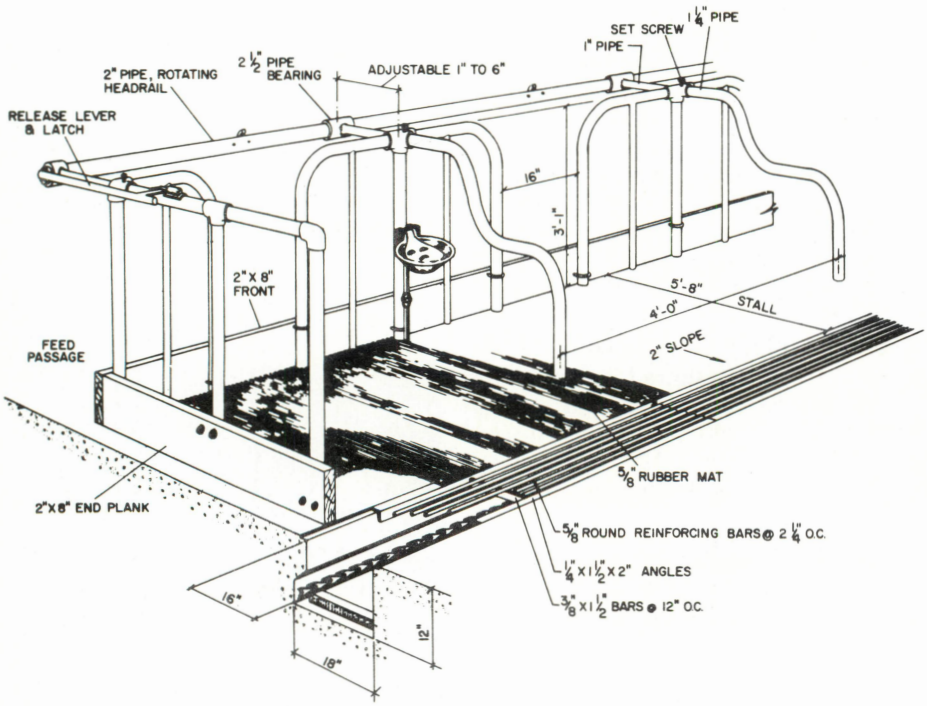

Figure 10a. Details of quick-release single headrail tie-stall, Barn 210. Stall details from rear.

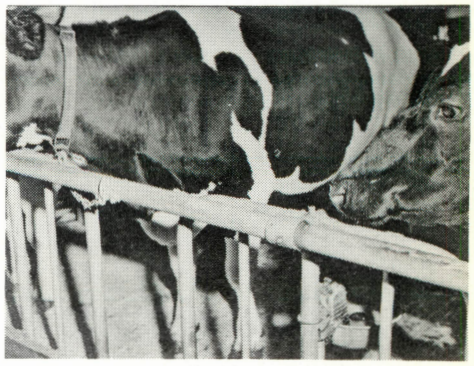

Figure 10b. Adjustable single headrail can be rotated for quick release of cow groups.

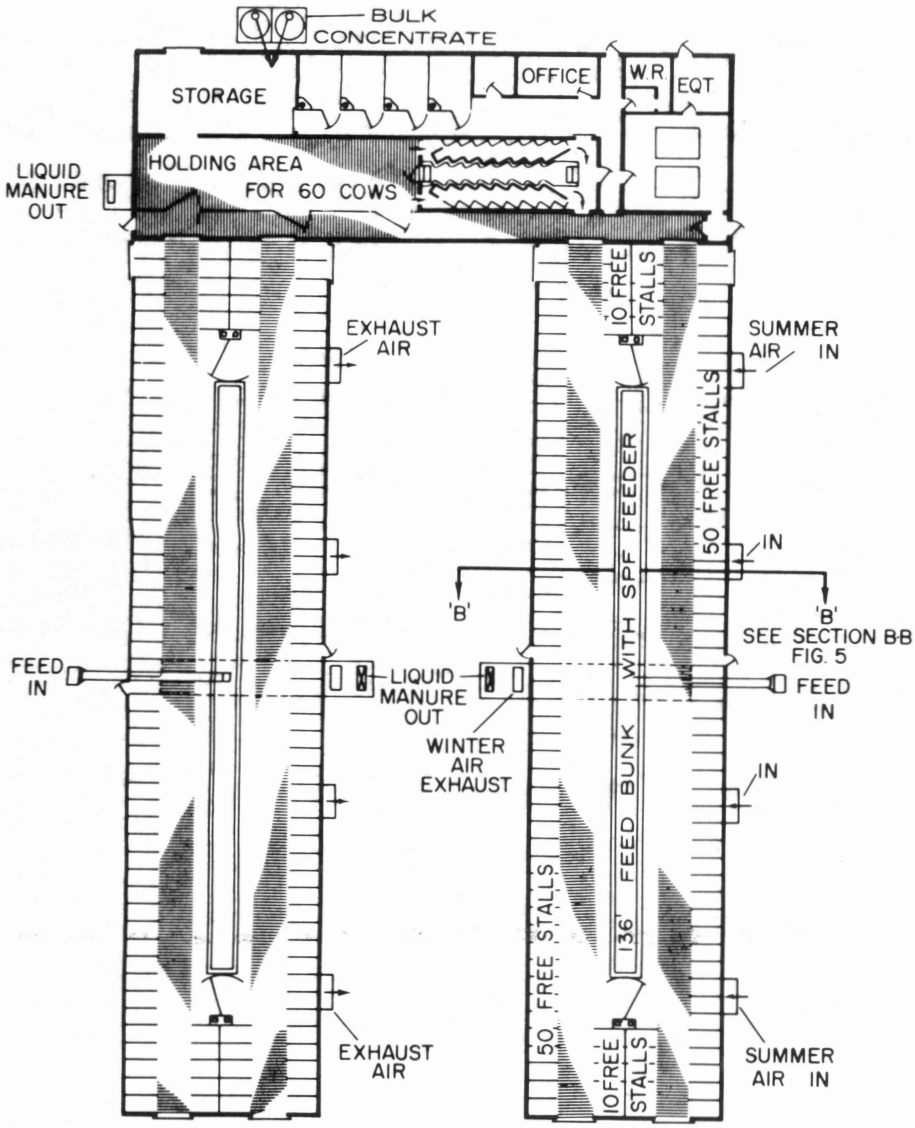

Figure 11. Floor plan of Barn 208, free stall milking barn for 240 cows.

is the quick-release single headrail tie-stall (figure 10). A pipe headrail has adjustment fore-and-aft to accommodate various size-groups of cows. Each cow is attached by neck-strap and chain to a hook on the front of the headrail; rotating this headrail by a lever drops the chains, simultaneously releasing 15 cows for milking. To retain one cow of the group, a clip can be inserted through the end of the hook to secure the chain.

Rubber stall mats are used to minimize bedding requirements. Steel gratings of 5/8-inch reinforcing rod over the gutters make cow-moving safer and minimize dirty tails.

Free Stall Milking Barn 208

This unit for housing and milking 240 third-and-later lactation cows is planned for 1968 construction. It will have two free stall wings (see figure 11), each virtually identical to the north wing of 209 described above.

Free stall housing was selected here since no individual feed intake data are required for this age-group. Also, the free stall milking unit will provide a useful management comparison with the Barn 210 tie-stall arrangement.

The housing arrangement lends itself to dividing the herd into four groups of 60, based on stage of lactation and level of production, and consequent differing ration requirements and rates of milking.

Herd management staff have indicated they would prefer deeper bedding than that allowed by the heel curb four inches above the stall platform as in Barn 209. Barn 208, will, therefore, have stalls of identical design except that stall platforms and stall dividers will be lowered two inches.

Bull Barn 204

Like Barn 208, this unit is being planned for 1968 construction.

ACKNOWLEDGEMENTS

Special mention should be made here of the major planning and design contributions made to this project by certain individuals: L. W. Argue, Consulting Engineer, Brais Frigon Hanley Brett and Minty, Ottawa; J. Batty, Large Animal Plant Supervisor, Animal Research Institute; G. Grant, Project Architect, National Capital Region, Department of Public Works; G. B. Matthews, Resources Manager, Animal Research Institute; P. J. McGann, Greenbelt Planning Officer, Architectural and Engineering Section, Research Branch.

REFERENCES

1. Farm Building Standards, 1965. Supplement No. 6 to the National Building Code of Canada, issued by the Associate Committee on the National Building Code, National Research Council, Ottawa.
2. Forsyth, R. J. and J. Walker-Love. The individual calf pen. Farm Building Progress, No. 3, July 1965, 5-6.
3. Thomson, J. M. and J. K. S. Hall. The introduction of cubicles, self-feeding and parlour milking at Auchincruive. Scottish Agriculture, Spring 1964.
4. Turnbull, J. E. European experience with removal of cattle manure from slotted floor barns. Canadian Agricultural Engineering Journal, Vol. 9, No. 1, Jan. 1967, 33-36.