THERMOSIPHON HEAT EXCHANGER FOR USE IN ANIMAL SHELTERS

B.S. Larkin
Gas Dynamics Laboratory
National Research Council
Ottawa

J.E. Turnbull
Member CSAE
Engineering Research Service
Agriculture Canada
Ottawa

R.S. Gowe
Animal Research Institute
Agriculture Canada
Ottawa

INTRODUCTION

An animal building is ventilated to control heat, water vapor, gases and odors given off by the animals. Where the ventilation rate is determined by sets of exhaust fans controlled by interior thermostats (the usual method) the heat losses are automatically balanced to the heat supply. With this arrangement, control of excessive humidity in the building is usually no problem as long as outside ambient temperature remains above a particular minimum. However, with colder weather a point is reached at which the mean ventilation rate controlled to balance the animal heat production is too low to remove the water vapor produced.

For example, in a typical well insulated swine growing building maintained at 60°F (15°C) this heat deficit occurs at about 25°F (−3°C) outdoor temperature. For a more detailed discussion see (2), (5), and (6). During colder periods of a typical Canadian winter the options are: (i) to reduce ventilation rate, resulting in high humidity, condensation and odors, (ii) to maintain higher ventilation to help control humidity but permit a much colder building, or (iii) to add enough heat to maintain adequate ventilation and temperature.

One method of adding heat is to recover it from the exhaust air with a heat exchanger. Giese and Downing (2) and Giese and Ibrahim (3) studied tube and shell heat exchangers. Giese and Bond (1), Turnbull[a] and Ogilvie (4) studied plate-type heat exchangers. Witz and Pratt[b] reported on a rock-bed heat storage system through which incoming and outgoing flows were alternated.

Contribution No. 468 and 545 from Engineering Research Service and Animal Research Institute, respectively.

RECEIVED FOR PUBLICATION AUGUST 6, 1974

The design of various types of clean heat exchangers to give a desired heat recovery is well documented; the important question is whether design performance can be maintained under typical dusty farm conditions. In the heat exchanger tested, the locations where fouling can collect are all easily accessible, so that cleaning is simple. The tests evaluated the effect of fouling on the system and ease of cleaning in a typical poultry environment.

One problem with air-to-air heat exchangers is the low air-to-surface heat transfer coefficient. For significant heat transfer, large surface areas are required. This heat exchanger uses standard mass-produced finned tubing to give the required surface area economically within compact external dimensions.

THERMOSIPHON HEAT EXCHANGER

Figure 1 shows one element of a thermosiphon heat exchanger. Heat is transferred from the exhaust duct to the inlet duct along the thermosiphon tubes.

During assembly, the air is removed from the tubes. A measured quantity of working fluid (in this case Refrigerant 22) is put into each tube so that the lower section is filled with liquid and the upper section contains vapor. In operation, whenever the inlet air is colder than the exhaust air the vapor will start to condense. This reduces the pressure in the tube and the liquid begins to boil. The resulting vapor flows to the cooler section of the tube and condenses, releasing latent heat. Heat is thus transported along the tube by a continuous cycle of evaporation, vapor flow, condensation and gravity return. This latent heat transport is much more effective than conduction; the tube has an effective conductivity which is several orders of magnitude higher than that of a copper bar.

There is a small temperature drop associated with the pressure difference required to cause vapor flow but this is usually negligible. In an animal shelter heat exchanger, the boiling and condensing coefficients are high, or about 400-500 Btu/ft^{2}h°F (2,300-2,800 watts/m^2°C) so that the temperature drops at the condensing and boiling surfaces, although not negligible, are acceptable.

The advantages of this type of heat exchanger are: (i) Secondary surface of commercial finned tubing where heat is transferred between metal and air; (ii) Metal/air interfaces easily accessible for cleaning, unlike previous plate-type heat exchangers; (iii) Simplicity and ease of maintenance, with no mechanical parts, pipe connections, headers or valves which may leak; (iv) Compact physical arrangement of the heat exchanger, fitting easily into normal rectangular ducting without complicated headers or transition pieces.

It is also useful to compare this heat recovery application with other buildings such as hospitals, apartments and office buildings. The special features of the animal shelter application are: (i) The exhaust air is dirty. Tolerance of fouling and ease of cleaning are essential. (ii) There are no specialized maintenance technicians at hand. Reliability and ease of maintenance are more important (iii) In most buildings a heat exchanger is designed for maximum practical heat recovery, i.e. about 75% effectiveness. This means that the heat exchanger recovers about 75% of the theoretical maximum heat recovery, which depends on the temperature difference between the exhaust and intake air streams. When designed to 75% effectiveness a thermosiphon type heat exchanger is more

[a] Turnbull, J.E. Performance of a perpendicular flow air-to-air heat exchanger. Agric. Eng. Ext. Release, Ontario Dep. Agric., Guelph, Ontario, Nov. 1965.

[b] Witz, R.L. and G.L. Pratt. Innovation in beef confinement housing and equipment. ASAE paper no. 71-208, 1971.

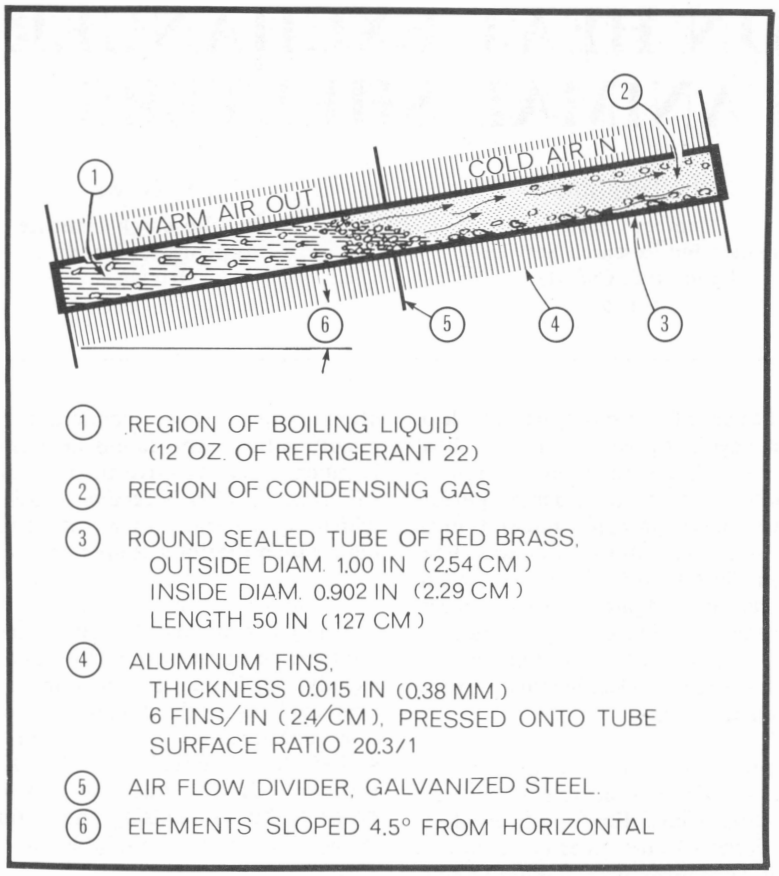

Figure 1. Diagram of a thermosiphon tube (not to scale) with specifications as used in this experiment.

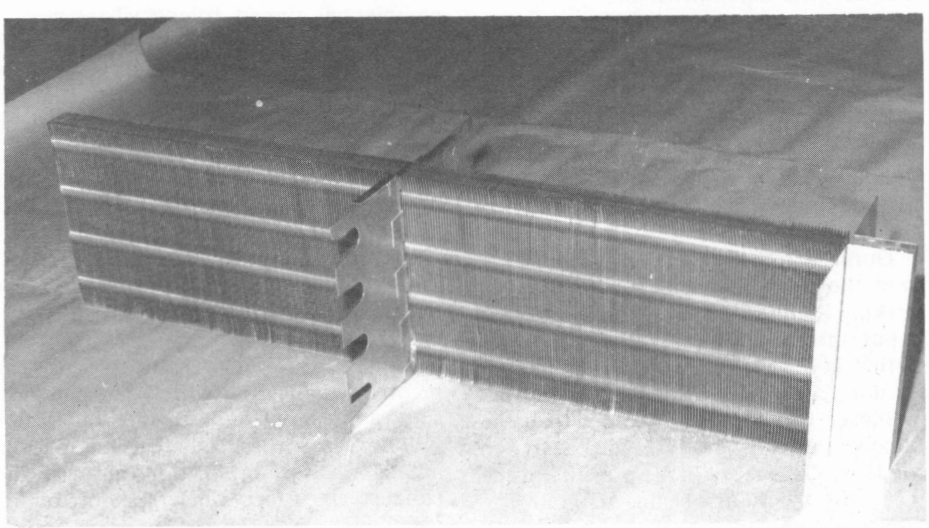

Figure 2. Thermosiphon tube bank.

expensive than some other types, but at lower effectiveness it is competitive. With laying chickens (a typical farm example) 40% effectiveness is about optimum; this will recover enough heat for good ventiliation down to −30°F (−34°C) outside temperature. Below this, additional heat cannot come from the exhaust air, otherwise the exhaust flow would be cooled below freezing and the system would fill with ice. This appears to be the practical upper limit on effectiveness and is typical of most farm applications.

LABORATORY TESTS

Laboratory tests were carried out to measure the boiling and condensing coefficients in a thermosiphon tube, for typical conditions in a heat exchanger. The test section consisted of thick-walled copper tube, 0.951-inch (2.41-cm) inside diameter. Vapor temperatures were measured with a thermocouple passed along a smaller tube (o.d. = 0.061 inch (1.55 mm), i.d. = 0.045 inch (1.14 mm)) running down the center of the main tube. A similar tube was buried in the wall of the main tube, so that the tube wall temperature could be measured by moving a thermocouple along its length. Using the same thermocouple for measuring all temperatures minimized calibration errors. Heat was supplied electrically at one end and removed by a fluid flowing through a cooling jacket at the other end.

These tests led to the following empirical correlations, based on the inside tube surface:

$$H_b = 91 + 0.0786Q + 2.57T \quad \ldots\ldots\ldots (1)$$

$$H_c = 645 - 0.052Q - 1.24T \quad \ldots\ldots\ldots (2)$$

where

H_b = boiling heat transfer coefficient (Btu/ft^{2}h°F)
H_c = condensing heat transfer coefficient (Btu/ft^{2}h°F)
Q = heat flux (Btu/ft^{2}h)
T = vapor temperature (°F)

HEAT EXCHANGER

The heat exchanger was made up from thermosiphon tube elements (see Figures 1 and 2) banked vertically four tube elements per bank, with one set of aluminum fins. In the first winter nine banks of tubes were used; in the second winter this was reduced to five.

TEST OBJECTIVES

1. To demonstrate the operation of a thermosiphon heat exchanger.
2. To verify design correlations.
3. To investigate the effect of fouling on flow and heat transfer.
4. To study the problem of heat exchanger freezing.
5. To evaluate cleaning methods for the heat exchanger and filters.

CHICKEN HOUSE INSTALLATION

Figure 3 shows the equipment arrangement in the attic space of a research chicken house at the Animal Research Institute Greenbelt Farm, Ottawa.

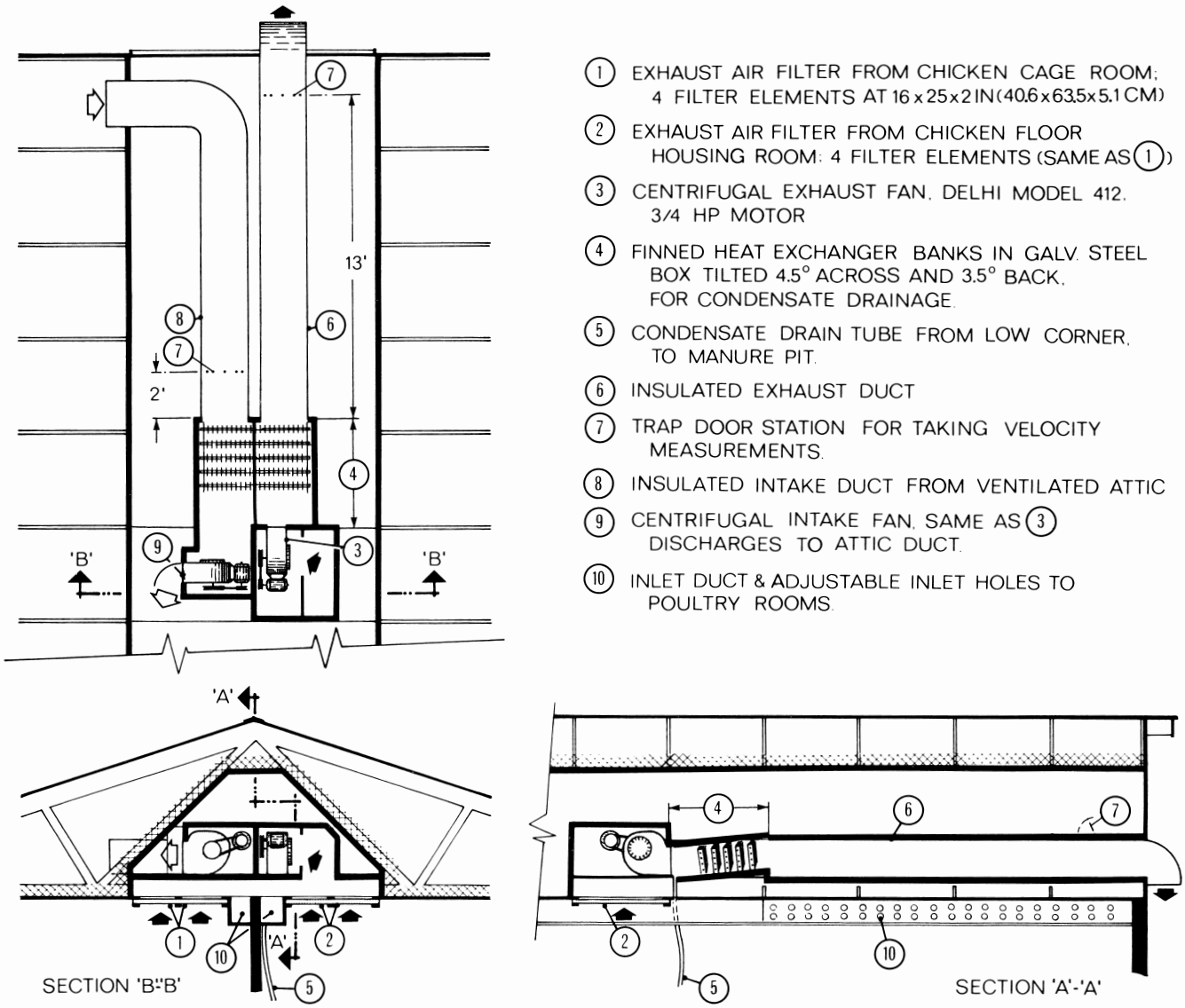

Figure 3. Detail of heat exchanger installation.

The ducting and equipment was fitted into a rather tight triangular duct space within the roof trusswork, to serve two chicken rooms in the ground flow below. Fresh outside air was drawn from the ventilated attic space, warmed through the heat exchanger and discharged into the attic duct surrounding the equipment, then into the poultry rooms below through inlets at the top of the center wall dividing the rooms.

Exhaust air was drawn through air filters in the ceiling of each room and into the centrifugal exhaust fan, then blown through the heat exchanger to exhaust outdoors at the gable end of the building. Straight duct sections on intake and exhaust air flows were designed for taking air velocity measurements for estimating throughputs. Chickens were housed in cages in one room and on slat and litter floor in the other room. The heat exchanger system was superimposed on the conventional intake/exhaust ventilation system such that in warmer winter weather the original exhaust fans would increase the ventilation from the attic in steps, to control chicken room temperature.

TEST PROCEDURE

January-February 1973

The unit was operated for 21 days, with 600 birds of average weight 3.6 lb (1.6 kg) in each room. The air flow through the heat exchanger in each direction was about 900 scfm (25.5 m^3/min), about 50% higher than the recommended minimum flow. Also, the small ventilating fans in the rooms ran continuously so that the total ventilation rate was much higher than the required minimum.

Flow temperatures and velocities were obtained for a range of outside temperatures, using calibrated mercury thermometers and a calibrated vane anemometer.

January-February 1974

Prior to this second test period the nine tube banks were reduced to five. Calculations showed that five tube banks were close to the optimum for a typical animal production unit. The heat

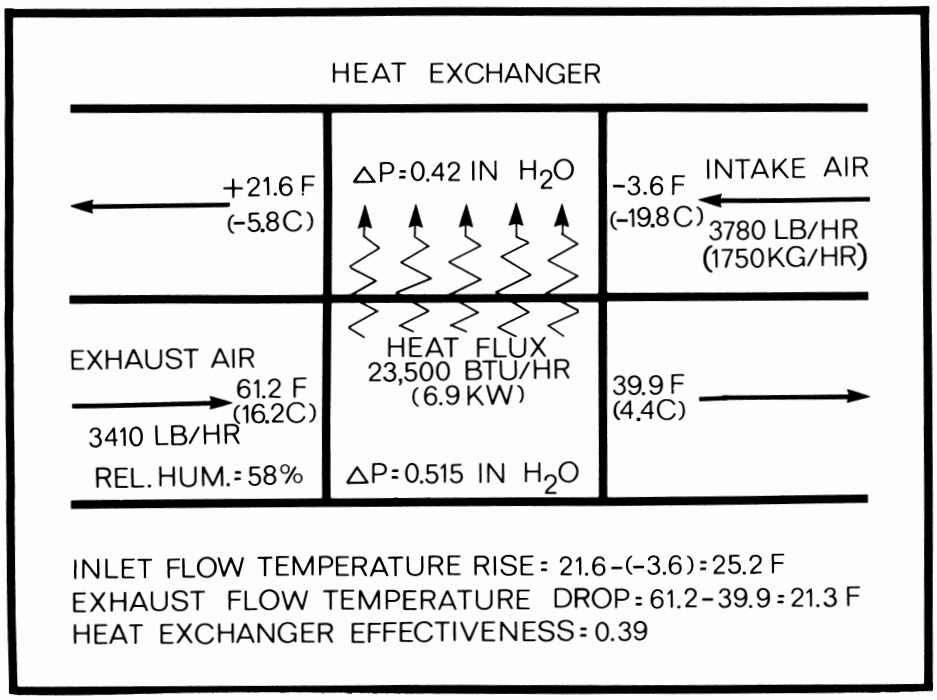

Figure 4. Typical 5-bank heat exchanger performance diagram, for February 15, 1974.

TABLE I EXPERIMENTAL RESULTS, 1973 TESTS

Day	Inlet flow lb/h	Exhaust flow lb/h	Effectiveness factor
2	2,250	3,000	1.15
5	2,285	2,540	0.99
6	2,305	2,875	1.07
7	2,195	2,980	1.15
11	2,190	3,060	1.13
17	2,325	2,590	1.00
20	2,475	2,400	1.10

TABLE II EXPERIMENTAL RESULTS, 1974 TESTS

Day	Inlet flow lb/h	Exhaust flow lb/h	Effectiveness factor
17	1,770	1,980	1.18
18	1,700	1,850	1.07
21	1,870	1,540	1.14
24	1,900	1,550	1.11
25	1,890	1,705	1.08
28	1,865	1,430	1.10
32	1,745	1,245	1.13
33	1,870	1,240	1.07
34	1,815	1,352	1.11

exchanger was cleaned with a vacuum cleaner.

To control freezing of condensate in the exhaust side of the heat exchanger elements, a thermostat in the downstream exhaust duct was set to stop the intake fan whenever final exhaust air temperature approached freezing. When necessary this stopped the cold intake air flow, allowing uncooled exhaust air to defrost the tube banks.

The heat exchanger was operated for 38 days. For the first 15 days there were about 500 birds (average weight 3.6 lb (1.6 kg)) in each room; then the number in the cage room was increased to 1,080 birds. The electric heaters in each poultry room were set at 58°F on, 61°F off (14.4°C, 16.1°C). The room ventilation fans were set at 67°F on, 64°F off (19.4°C, 17.8°C). The heat exchanger fans were set to give a flow of about 700 scfm (20 m^3/min).

Results were obtained at various outside temperatures after the extra birds were added to the cage room. Finally, the effect on flow rate of fouling in various parts of the system was investigated.

RESULTS

Figure 4 shows typical performance with five banks of thermosiphon tube elements operating.

Fouling can affect the performance of the recovery system in two ways. Firstly, the exhaust flow is reduced. This effect can be assessed by comparing exhaust flows over the period of the test. Secondly, the heat transfer coefficient between the exhaust air and the heat exchanger surface may be reduced. This is more complicated because both the exhaust flow and the system temperatures vary from day to day, so that a simple statement of the heat transferred per hour is not a valid comparison. In order to isolate this effect, an "effectiveness factor" has been defined as the ratio of the heat transfer as measured to the heat transfer predicted theoretically for the same temperature and flow with a clean heat exchanger. This dimensionless ratio has been calculated for each set of test results as shown in Tables I (1973) and II (1974).

The significance of this parameter lies in its variation during the test. Whether the value is greater or less than unity depends on whether the design correlations are conservative or optimistic and also on the errors in the experimental measurements.

January-February 1973

There is considerable scatter in these results and it is not clear whether either the flow or the effectiveness factor decreased during the tests. Also, much of the fouling was removed from the building by over-ventilation through the normal ventilating system so that the dust content in the part of the air flowing through the heat exchanger was not typical. This preliminary part of the test served to demonstrate the operation of the heat exchanger, confirm the design relationships and give experience on the freezing problem. Inspection of the tube banks afterwards showed that most of the fouling was a soft fluff, which was removed with a vacuum cleaner.

January-February 1974

Table II shows a reducing exhaust flow over the period of the test. No significant change in effectiveness factor was observed.

At the end of the run, tests were carried out to determine the cause of the flow reductions.

First, an unsuccessful attempt was made to clean the heat exchanger with a vacuum cleaner. The depth of cleaning was limited to the slight penetration of the brush between the fins; measurements before and after showed no change in the flow.

Next, the exhaust flow was measured with one of the filters removed, reducing the pressure drop across the filters to zero. The resulting increase in flow was found to be only 3%.

Fouling also affects the centrifugal fan rotor. When the rotor was cleaned the exhaust flow increased by 7%.

Finally, the heat exchanger was cleaned with a high-pressure water jet. About 5 minutes cleaning was sufficient to remove the accumulated fouling in both intake and exhaust sides of the heat exchanger. The exhaust side was heavily fouled and required most of the cleaning time; the fouling in the inlet side was not significant. Measurements before and after cleaning showed that fouling had reduced the exhaust flow by 28%. This was obviously the major cause of the flow decrease.

The fouling in the heat exchanger was a layer of dust, rather than the fluff found after the first tests. There was condensation in the tube banks during the second test series, which would cause dust to stick to the metal surface.

FREEZING IN THE HEAT EXCHANGER

During the first winter the heat exchanger froze up on several occasions. It was found that it would defrost if the cold intake air flow was stopped by shutting off the intake fan.

The heat exchanger froze on one occasion during the 1974 tests, with the thermostat bulb positioned in the center of the duct and set to switch off the intake fan at 34°F (1.1°C) exhaust temperature. Lowest exhaust temperatures were found in the exhaust flow nearest the inlet duct. The thermostat bulb was moved to this location and reset to 35°F (1.7°C). No further freezing was observed although on one occasion the overnight minimum temperature was −10°F (−23°C) compared with −7°F (−21.7°C) on the occasion when freezing occurred.

DISCUSSION

These tests show that the heat exchanger operates satisfactorily and can be cleaned easily. However, cleaning a heat exchanger is not as simple as cleaning a filter. Therefore, a filter system should extract most of the fouling before it reaches the heat exchanger. The filters must be economical and effective enough to make heat exchanger cleaning infrequent, and yet not block up too quickly themselves.

Neither disposable glass-fiber nor washable aluminum-mesh filters were satisfactory. The disposable types were too expensive to be replaced at least weekly. The aluminum-mesh type did not remove enough fouling to keep the heat exchanger acceptably clean, and the mesh was too fragile.

CONCLUSIONS

The thermosiphon heat exchanger is potentially suitable for use in a chicken house heat recovery system.

Dust fouling causes significant reductions in heat transfer rate and exhaust air flow through the heat exchanger. Further tests are proposed to find a more economical, effective and easily maintained filter arrangement so that the recovery of the heat exchanger can be maintained.

ACKNOWLEDGMENTS

The contributions by H.A. Dubroy and R. Alary to the design, construction, installation and testing of the thermosiphon heat exchanger are gratefully acknowledged.

REFERENCES

1. Giese, H. and T.E. Bond. 1952. Design of a plate-type heat exchanger. Agric. Eng. 33:10, pp. 617-622, Oct.
2. Giese, H. and C.G.E. Downing. 1950. Application of heat exchangers to dairy barn ventilation. Agric. Eng. 31:4, pp. 167-170, 174, April.
3. Giese, H. and A.A. Ibrahim. 1950. Ventilation of animal shelters by the use of heat exchangers. Agric. Eng. 31:7, pp. 327-333, July.
4. Ogilvie, J.R. 1967. A heat exchanger for livestock shelters. Can. Agric. Eng. 9:1, pp. 31-32, 53, Jan.
5. Turnbull, J.E. 1973. Engineering for intensive housing of livestock. Pub. 1503, Can. Dep. Agric., Ottawa, Ont.
6. Turnbull, J.E. and N.A. Bird. 1971. Confinement swine housing. Publ. 1451, Can. Dep. Agric., Ottawa, Ont.