A MODEL STUDY OF THE BIN FLOW OF DRY GRAIN

by

S. H. Collins
Member C.S.A.E.

Paul K. K. Yin
Graduate Student

Department of Engineering Science
University of Guelph
Guelph, Ontario

INTRODUCTION

The flow of granular materials under gravity has been investigated by many workers because of its widespread occurrence in agricultural and industrial handling systems. The most complete theoretical studies of the stress and velocity fields have been made by Jenike and his co-workers, (3, 4) who included the effects of cohesion in the granular mass. The vertical compressive stresses in a silo filled with a cohesionless material have been studied by Janssen (quoted by Ketchum (5)), Jaky (2), and Barre (1). The rate of discharge of granules through an orifice in the bottom of a bin has been the subject of several papers. That of Rose and Tanaka (7) is an example.

The purpose of the present research is to provide, eventually, a complete quantitative description of the velocity fields in flowing cohesionless grain for at least one particular set of boundary conditions. This paper will give only the first qualitative observations that have been made, and will describe the effects that will have to be dealt with in the theoretical treatment.

Several workers have set up model bins in order to study the flow patterns (4, 6). In every case, they used two-dimensional models with two plane parallel glass walls. These models provided flow patterns that are correct cross-sections of the flow in a semi-infinite mass moving in two dimensions. Such models cannot be considered satisfactory for representing the flow in a cylindrical bin, however. There are strong theoretical reasons for distinguishing between the two cases, but as a single practical example one may consider the different angles of repose assumed by grain when it forms an external cone (the surface of a conical pile), an internal cone (the surface surrounding an orifice in the bottom of a vessel after flow has ceased), and a plane slope (the surface on one side of an elongated pile). In some materials these three angles of repose may differ widely.

Accordingly, a model bin in the form of one half of a vertical cylinder was constructed. The vertical front surface was closed by a plate-glass door. The flow patterns seen through the glass were assumed to be true axial cross - sections of cylindrical gravity flow. The assumption was justified for dry grain, which has a high internal friction compared to its friction against the glass.

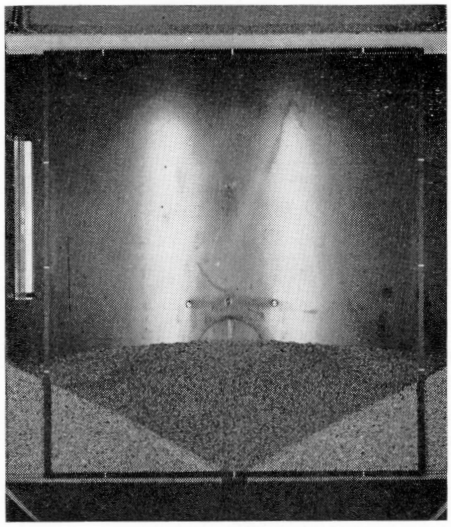

Figure 1. The model bin, showing the internal angle of repose.

Figure 1 shows a frontal view of the half-bin, with grain resting at its internal angle of repose after emptying through the central orifice. The figure also includes a foot-rule taped to the glass front, a black frame divided by white marks that were used to control the scale of the photographs, and, at the top, the wooden shutter that was used for placing the "time-lines" described below.

FLOW VISUALIZATION

Three methods were used to delineate the flow patterns. The first was to draw the path-lines of the particles on the glass with a grease-pencil, by following individual particles from equally spaced starting points along an arbitrary line near the top of the bin. In Figure 2, a set of these lines show the paths of particles flowing down through a central orifice.

The second method was to place "time-lines" in the flow patterns at one-minute intervals. These were thin horizontal lines of blackened grain placed against the glass in the grain mass as it moved downward. The apparatus for placing the time-lines

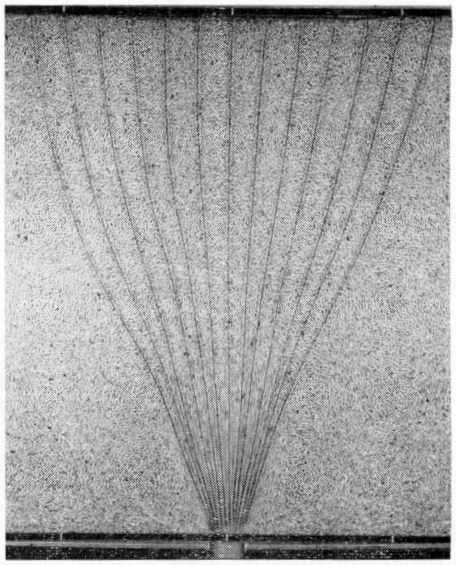

Figure 2. Bin flow through a central orifice.

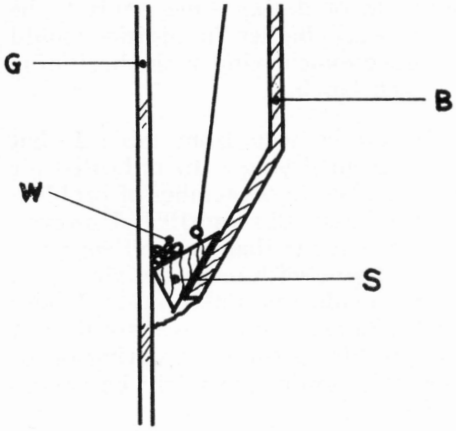

Figure 3. Apparatus for placing time-lines.

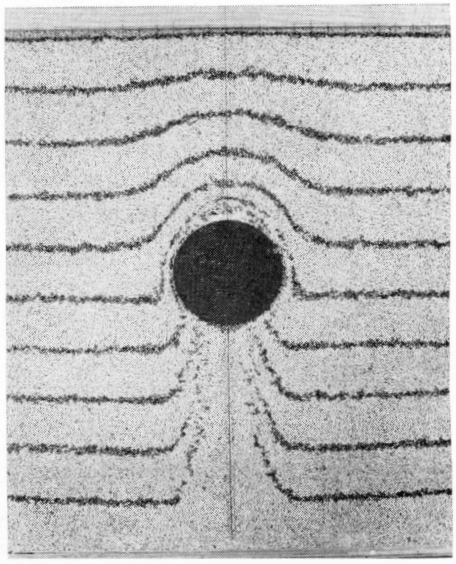

Figure 4. Time-lines for flow about a hemisphere.